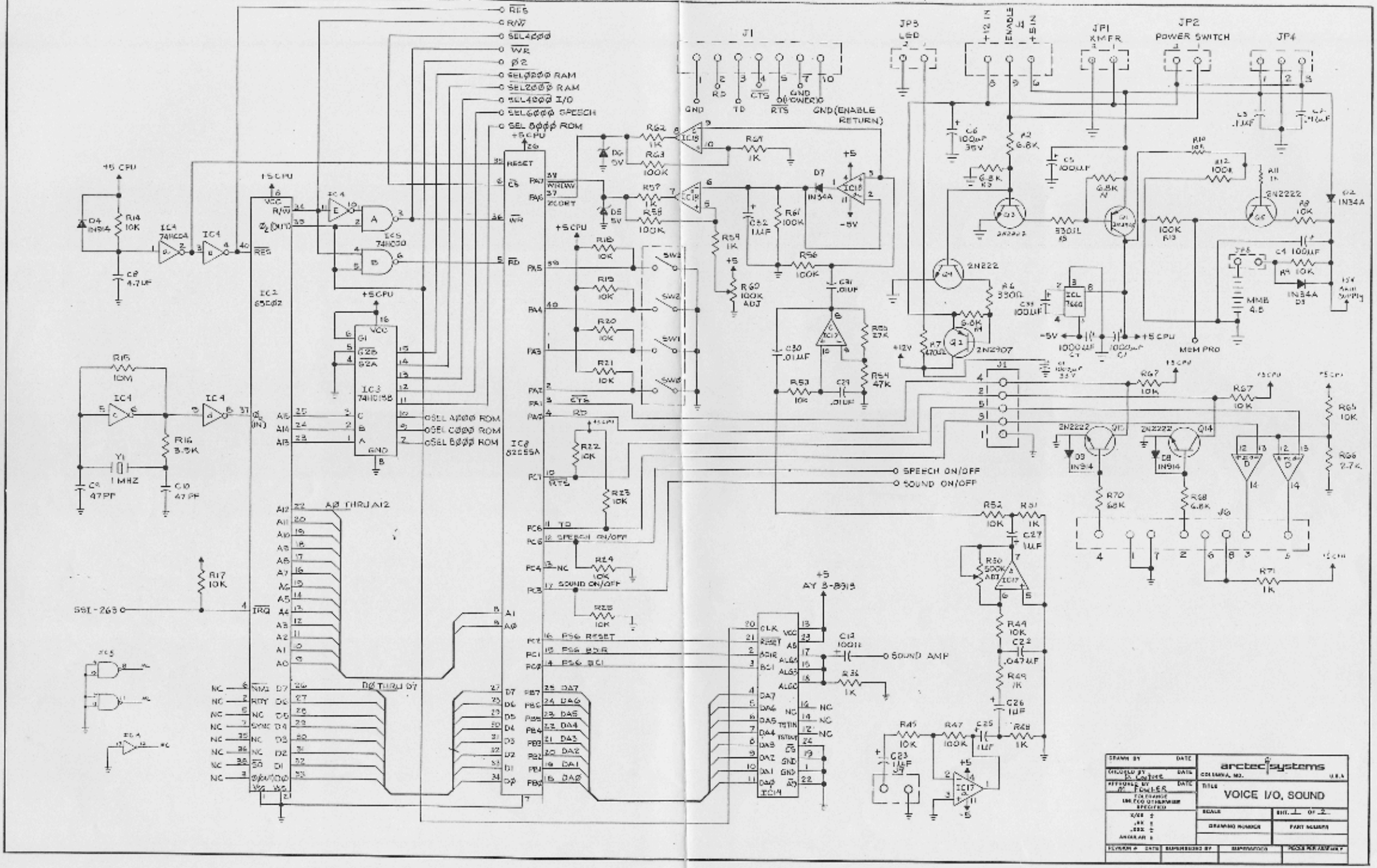

J1
GND
RD
TD
CTS
RTS
GND (POWER)
GND (ENABLE RETURN)
JP3 LED
+12 IN
ENABLE
+5 IN
JP1 XMFR
JP2 POWER SWITCH
JP4
+5 CPU
IC2 65C02
IC3 74HC15B
IC8 82C55A
IC4 74HC04
IC5 74HC00
IC14 AY 3-8913
SPEECH ON/OFF
SOUND ON/OFF
SOUND AMP
SSI-263
A0 THRU A12
D0 THRU D7
MEM PRO
2N2222
2N2907
2N2222
2N2222
1N34A
1N914
1N914
1N34A
1N34A
1MHZ
Y1
+5 AY 3-8913
arctec systems
COLUMBIA, MD.
U.S.A.
TITLE
VOICE I/O, SOUND
SCALE
SHT. 1 OF 2
DRAWING NUMBER
PART NUMBER
DRAWN BY
DATE
CHECKED BY
APPROVED BY
FOLDER